HITACHI

# Mini-Excavator ZAXIS30U Specifications

Rated Engine Power
DIN 6271, net 22.5 kW (30.6 PS)
SAE J1349, net 23.0 kW (30.9 hp)

| Operating Weight | (Rubber shoes) | (Grouser shoes) |
|---|---|---|
| 2-Pillar canopy version | 3 060 kg | 3 140 kg |
| 4-Pillar canopy version | 3 120 kg | 3 200 kg |
| Cab version | 3 180 kg | 3 260 kg |

Backhoe Buckets
ISO 7451 0.055 – 0.13 m³

***The 2- or 4-pillar canopy, or cab can be mounted on the upper-structure according to job needs and applicable regulations. The 4-pillar canopy and cab conform to TOPS (ISO 12117) and FOPS (ISO 10262, Level 1)* requirements.***

** Cab requires optional top guard.*

## ■ DIMENSIONS

Unit : mm

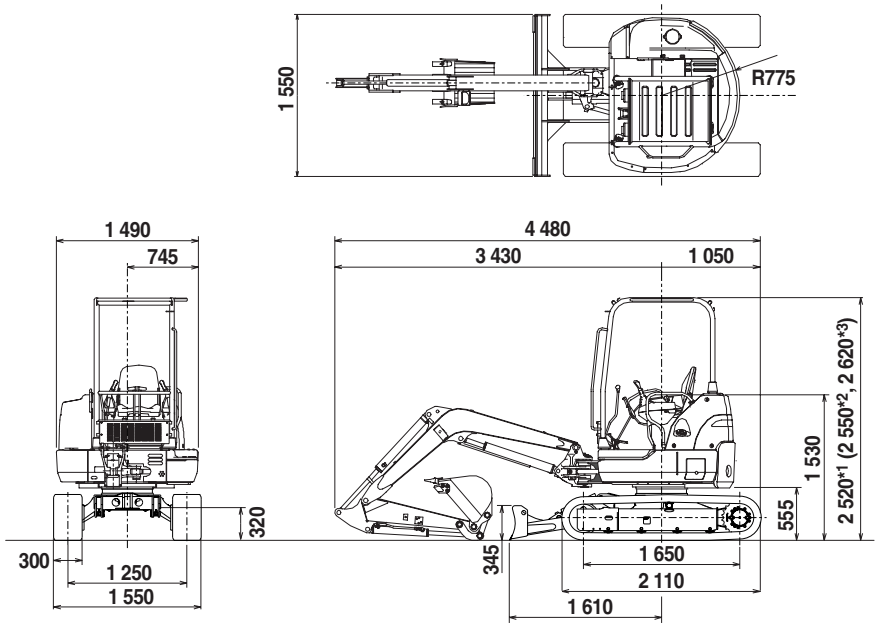


Notes:
1. The illustration at the left shows 4-pillar canopy version equipped with 300 mm rubber shoes.
2. Values are common to all versions except those marked with an asterisk (*).
   *1: 2-Pillar canopy
   *2: 4-Pillar canopy
   *3: Cab

## ■ WORKING RANGES

Unit : mm

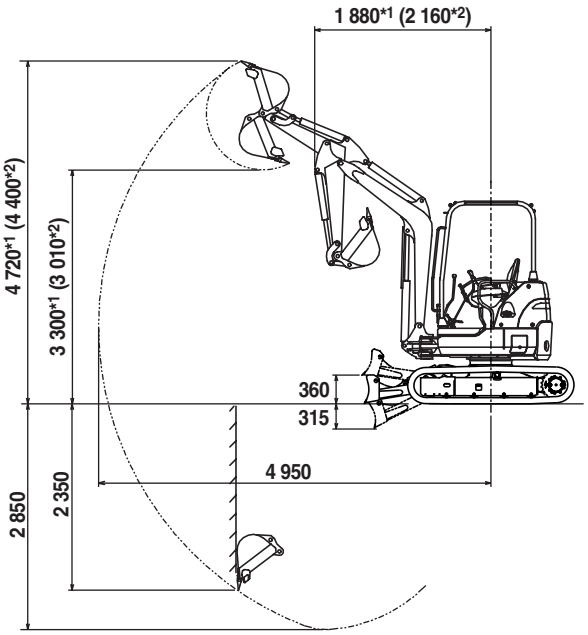


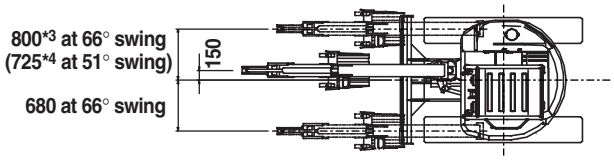


Notes:
1. The illustration at the left shows 4-pillar canopy version equipped with 0.09 m³ bucket, 1.17 m arm and 300 mm rubber shoes.
2. Values are common to all versions except those marked with an asterisk (*).
   *1: 2-Pillar canopy
   *2: 4-Pillar canopy and cab
   *3: 2- and 4-Pillar canopy
   *4: Cab

## ENGINE

Model..... Isuzu AA-3LD2
Type..... Water-cooled, 4-cycle, 3-cylinder direct injection type diesel engine
Rated power..... 22.5 kW (30.6 PS)
DIN 6271, net at 2 450 $min^{-1}$ (rpm)
Rated power..... 23.0 kW (30.9 hp)
SAE J1349, net at 2 450 $min^{-1}$ (rpm)
Maximum torque..... 97 N·m (9.9 kgf·m) at 1 800 $min^{-1}$ (rpm)
Piston displacement.....1.496 L
Bore and stroke..... 83.1 mm x 92 mm
Battery.....1 x 12 V, 52 Ah

## HYDRAULIC SYSTEM

**The Optimum Hyraulic System (OHS) uses three pumps for job efficiency and smooth combined operations.**

Main pumps.....Two variable displacement axial piston pumps
Maximum oil flow.....2 x 40.8 L/min
Third pump.....One gear pump
Maximum oil flow.....26.8 L/min
Pilot pump.....One gear pump
Maximum oil flow.....9.9 L/min

### Relief Valve Settings

Implement circuit.....24.5 MPa (250 $kgf/cm^2$)
Swing circuit.....13.7 MPa (140 $kgf/cm^2$)
Travel circuit.....24.5 MPa (250 $kgf/cm^2$)
Pilot circuit.....3.9 MPa (40 $kgf/cm^2$)

### Hydraulic Cylinders

High-strength piston rods and tubes. Cylinder cushion mechanisms provided in boom raise, arm roll-in and roll-out circuits to absorb shocks at stroke ends.

### Dimensions

| | No. | Bore | Rod dia. | Stroke |
|---|---|---|---|---|
| Boom..... | 1 | 75 mm | 45 mm | 569 mm (541 mm) |
| Arm..... | 1 | 75 mm | 45 mm | 589 mm |
| Bucket..... | 1 | 65 mm | 40 mm | 440 mm |
| Boom swing... | 1 | 85 mm | 45 mm | 517 mm |
| Blade..... | 1 | 85 mm | 45 mm | 135 mm |

Note: The figure in ( ) shows the stroke for 4-pillar canopy version and cab version.

## CONTROLS

Hydraulic pilot control levers for all operations.

## SWING MECHANISM

High-torque, axial piston motor with planetary reduction gear. Swing circle is single-row, shear-type ball bearing with induction-hardened internal gear. Internal gear and pinion are immersed in lubricant. Swing parking brake is spring-set/hydraulic-released disc type. Swing shockless valve built in swing motor absorbs shocks when stopping swing, ensuring smooth stops.

Swing speed..... 9.0 $min^{-1}$ (9.0 rpm)

## UNDERCARRIAGE

### Tracks

Tractor-type undercarriage. Welded track frame using carefully selected materials. Side frame welded to track frame.

### Numbers of Rollers on Each Side

Upper roller.....1
Lower rollers.....4

### Traction Device

Each track driven by a high-torque, 2-speed axial piston motor through planetary reduction gear, allowing counter-rotation of the tracks. Travel shockless relief valve built in travel motor absorbs shocks when stopping travel, ensuring smooth stops. Parking brake is spring-set / hydraulic-released disc type.

Travel speeds (rubber shoes)..... High : 0 – 4.4 km/h
Low : 0 – 2.8 km/h
Travel speeds (grouser shoes)..... High : 0 – 4.3 km/h
Low : 0 – 2.7 km/h
Gradeability.....30 degrees (58%) continuous

## WEIGHTS AND GROUND PRESSURE

Equipped with 2.28 m boom, 1.17 m arm and 0.09 $m^3$ (PCSA heaped) bucket

| | Operating weight | Ground pressure |
|---|---|---|
| 2-Pillar canopy version | | |
| 300 mm rubber shoes.... | 3 060 kg | 28 kPa (0.28 $kgf/cm^2$) |
| 300 mm grouser shoes.. | 3 140 kg | 28 kPa (0.29 $kgf/cm^2$) |
| 4-Pillar cab version | | |
| 300 mm rubber shoes.... | 3 120 kg | 28 kPa (0.29 $kgf/cm^2$) |
| 300 mm grouser shoes.. | 3 200 kg | 29 kPa (0.29 $kgf/cm^2$) |
| Cab version | | |
| 300 mm rubber shoes.... | 3 180 kg | 29 kPa (0.29 $kgf/cm^2$) |
| 300 mm grouser shoes.. | 3 260 kg | 29 kPa (0.30 $kgf/cm^2$) |

## FRONT-END ATTACHMENTS

Backhoe Buckets

| ISO 7451 capacity | Width | | No. of teeth | Weight | Use | |
|---|---|---|---|---|---|---|
| | Without side cutters | With side cutters | | | 1.17 m Std. arm | 1.47 m Long arm |
| 0.055 $m^3$ | 300 mm | 350 mm | 3 | 61 kg | A | A |
| 0.065 $m^3$ | 350 mm | 400 mm | 3 | 64 kg | A | A |
| 0.08 $m^3$ | 400 mm | 450 mm | 3 | 67 kg | A | A |
| 0.09 $m^3$ | 450 mm | 500 mm | 4 | 71 kg | A | B |
| 0.10 $m^3$ | 500 mm | 550 mm | 4 | 74 kg | B | C |
| 0.11 $m^3$ | 550 mm | 600 mm | 4 | 78 kg | C | C |
| 0.13 $m^3$ | 600 mm | 650 mm | 4 | 82 kg | C | D |
| Arm crowd force | | | | | 16.7 kN (1 700 kgf) | 14.7 kN (1 500 kgf) |
| Bucket digging force | | | | | 27.5 kN (2 800 kgf) | |

A: General digging
B: Light-duty digging
C: Loading
D: Not recommended

Boom swing angle
2- and 4-pillar canopy versions.....Left 66°, Right 66°
Cab version.....Left 66°, Right 51°



## STANDARD EQUIPMENT

### Engine
- Water-separator for engine fuel system

### Hydraulic System
- Hydraulic pilot type control levers for boom, arm, bucket and swing
- Mechanical linkage type control levers for travel, boom swing and blade
- Pilot control shut-off levers for boom, arm, bucket and swing
- Anti-drift valve for front attachments
- Two-speed travel system
- Swing parking brake

### Operator's Room
- Two work lights
- Heater*2
- Windshield wiper*2
- Evacuation hammer*2
- Seat belt*1

Notes: *1 : For 4-pillar canopy and cab versions
*2 : For cab versions

### Undercarriage
- 300 mm rubber shoes
- Semi-long stay blade

### Front Attachments
- 2.28 m boom
- 1.17 m arm
- 0.09 $m^3$ hoe bucket
- Bucket clearance adjusting device
- O-ring type pin-seals for hoe bucket
- HN bushing

## OPTIONAL EQUIPMENT

### Engine
- Auto-idling system

### Hydraulic System
- Hydraulic P.T.O. port
- Hydraulic piping for breaker
- Travel parking brake
- Swing motion alarm device with lamp
- Travel motion alarm device

### Operator's Room
- Heater*2
- Air cooler*3
- Seat belt*1
- Windshield washer*3
- Wrist rest
- 12V outlet
- Air cleaner inner element
- FOPS top guard*3
- 2-way control lever pattern selector valve (Excavator/Backhoe loader)

Notes: *1 : For 2-pillar canopy version
*2 : For 2- and 4-pillar canopy versions
*3 : For cab version

### Undercarriage
- 300 mm grouser shoes
- 400 mm triangle shoes
- 400 mm grouser shoes
- 300 mm pad crawler shoes

### Front Attachments
- 1.47 m arm
- Backhoe buckets; see page 2.

### Counterweight
- Weight-added counterweight (270 kg added)

## ■ LIFTING CAPACITIES

**(Equipped with 2-pillar canopy)**

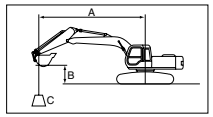


**A: Load radius**
**B: Load point height**
**C: Lifting capacity**

Rating over-side or 360 degrees / Rating over-front

Unit: 1 000 kg

### With dozer blade above ground

| Conditions | Load Point Height | Load Radius 2 m | | 3 m | | 4 m | | Maximum Reach | | |
|---|---|---|---|---|---|---|---|---|---|---|
| | | | | | | | | | | meter |
| Arm: 1.17 m<br>Bucket: 0.09 $m^3$<br>ISO 7451<br>Rubber shoes: 300 mm | 3 m | | | 0.51 | *0.57 | | | 0.27 | 0.35 | 4.24 |
| | 2 m | | | 0.49 | 0.63 | 0.29 | 0.38 | 0.22 | 0.29 | 4.66 |
| | 1 m | | | 0.45 | 0.58 | 0.28 | 0.36 | 0.20 | 0.27 | 4.75 |
| | Ground | | | 0.42 | 0.55 | 0.27 | 0.35 | 0.22 | 0.29 | 4.53 |
| | – 1 m | 0.81 | 1.11 | 0.41 | 0.55 | | | 0.28 | 0.37 | 3.91 |

### With dozer blade on ground

| Conditions | Load Point Height | Load Radius 2 m | | 3 m | | 4 m | | Maximum Reach | | |
|---|---|---|---|---|---|---|---|---|---|---|
| | | | | | | | | | | meter |
| Arm: 1.17 m<br>Bucket: 0.09 $m^3$<br>ISO 7451<br>Rubber shoes: 300 mm | 3 m | | | 0.51 | *0.57 | | | 0.27 | *0.58 | 4.24 |
| | 2 m | | | 0.49 | *0.70 | 0.29 | *0.64 | 0.22 | *0.57 | 4.66 |
| | 1 m | | | 0.45 | *1.02 | 0.28 | *0.72 | 0.20 | *0.61 | 4.75 |
| | Ground | | | 0.42 | *1.19 | 0.27 | *0.78 | 0.22 | *0.62 | 4.53 |
| | – 1 m | 0.81 | *1.74 | 0.41 | *1.10 | | | 0.28 | *0.60 | 3.91 |

Notes: 1. Rating are based on ISO 10567.
2. Lifting capacity does not exceed 75% of tipping load with the machine on firm, level ground or 87% full hydraulic capacity.
3. The load point is a hook (not standard equipment) located on the back of the bucket.
4. An asterisk mark (*) indicates load limited by hydraulic capacity.

The Specifications include data that are not applicable to certain areas.
Optional equipment may vary with territory specifications.
Specifications are subject to change without notice.

Hitachi Construction Machinery Co., Ltd.
**Head office:** 5-1 Koraku 2-chome, Bunkyo-ku
Tokyo 112-8563, Japan
**Telephone:** (03)3830-8050
**Facsimile:** (03)3830-8204

**KS-E415Q** Printed in Japan 03.09 (KA/KA, MT3)